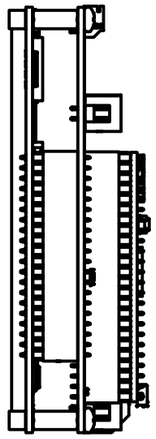

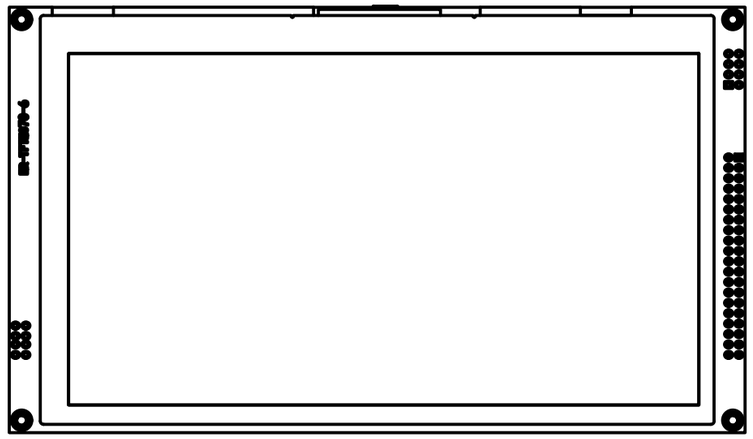

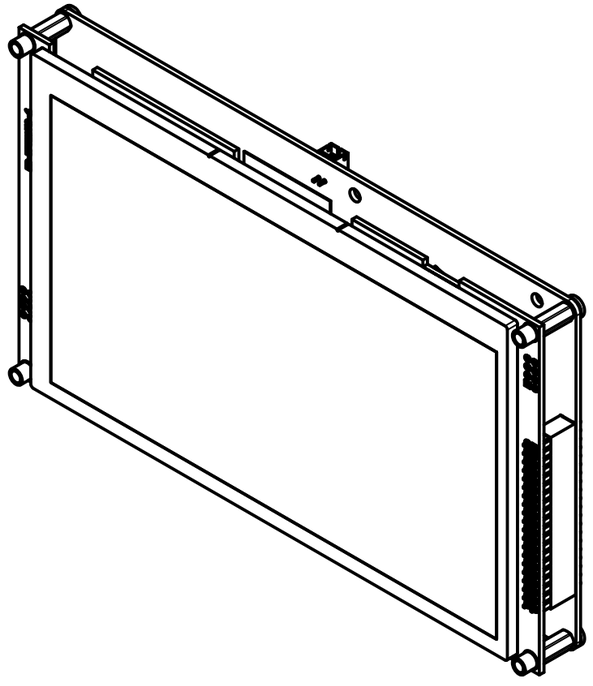

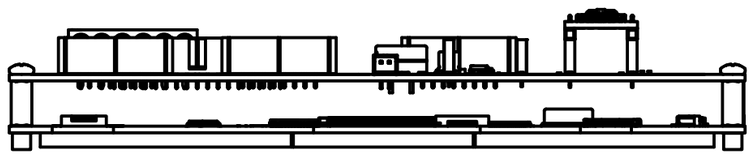

Dept.	Technical reference	Created by	Approved by
	Scale 2:3	J. Rostoker 6/20/2026	J. Kerman 6/20/2026
JEB'S CONTROLLER WORKS	Document type: CCA Assembly Drawing		Document status: RELEASED
	Title: Display Driver 7" Complete Kerbal Controller Mk1		DWG No. KC-01-1910
			Rev. A / Date of issue 6/20/2026 / Sheet 1/2

Parts List

Item	Qty	Part Number	Part Name	Description
1	1	KC-01-1912	Display Driver 7"	Custom PWB; Mfr: JLCPCB
2	4	94868A720	Standoff - M3 - 11mm x 4.5mm	Female Threaded Hex Standoff, 18-8 Stainless Steel, 4.5mm Hex, 11mm Long, M3 x 0.5mm Thread
3	4	92000A114	Screw - M3 - 5mm	Passivated 18-8 Stainless Steel Pan Head Phillips Screws, M3 x 0.5mm Thread, 5mm Long
4	1	ER-TFT070A2-6-5633	ER-TFT070A2-6	7 inch 1024x600 IPS TFT Touch Display Module with I2C SPI for Arduino; Pin Header-8080; 5V; Capacitive Touch Panel
5	4	93657A205	Spacer - M3 - Nylon - 4mm	Nylon Unthreaded Spacer, 4.5 mm OD, Off-White, 4 mm Long, for M3 Screw Size
6	1	TEENSY41_NE_PINS	Teensy 4.1 (With Headers)	Teensy USB Board, Version 4.1, Without Ethernet Chip, ARM Cortex-M7 at 600 MHz Microcontroller, 7936K Flash, 1024K RAM (512K tightly coupled), 4K EEPROM (emulated), Native SDIO SD Card port

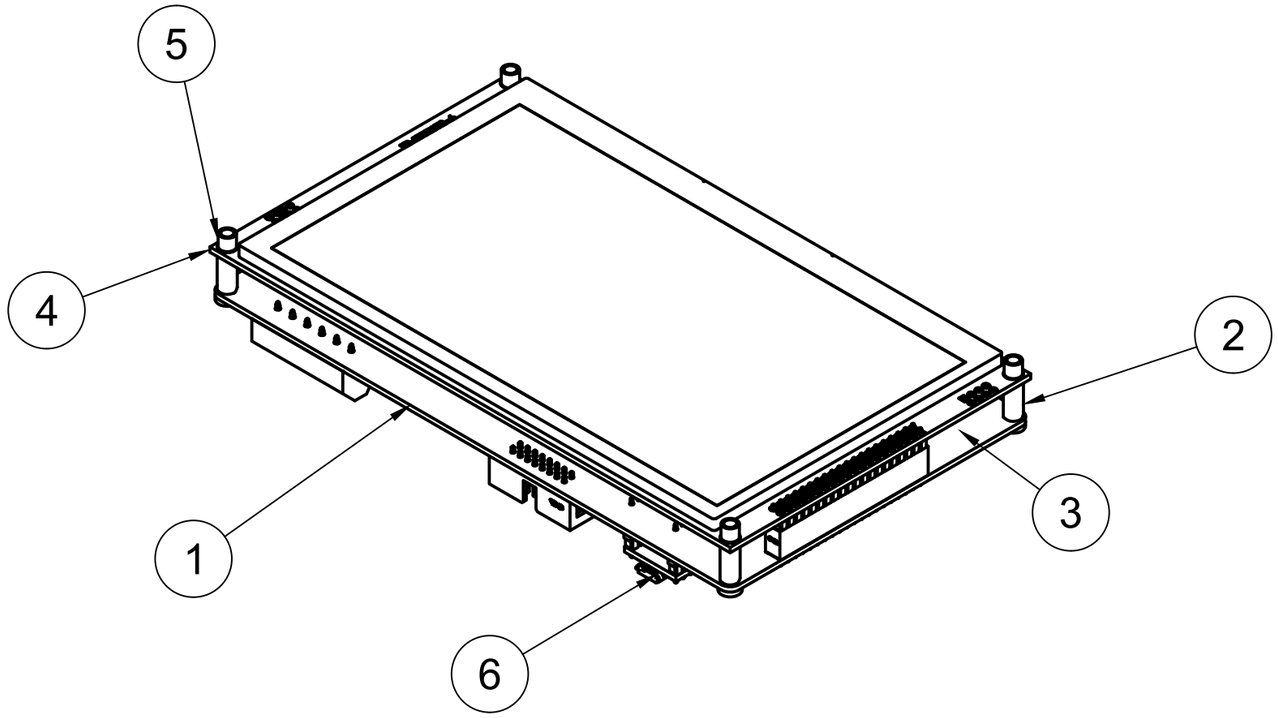

Part List

Dept.	Technical reference: Scale 2:3	Created by: J. Rostoker 6/20/2026	Approved by: J. Kerman 6/20/2026
JEB'S CONTROLLER WORKS		Document type: CCA Assembly Drawing	Document status: RELEASED
		Title: Display Driver 7" Complete Kerbal Controller Mk1	DWG No.: KC-01-1910
			Rev.: A; Date of issue: 6/20/2026; Sheet: 2/2